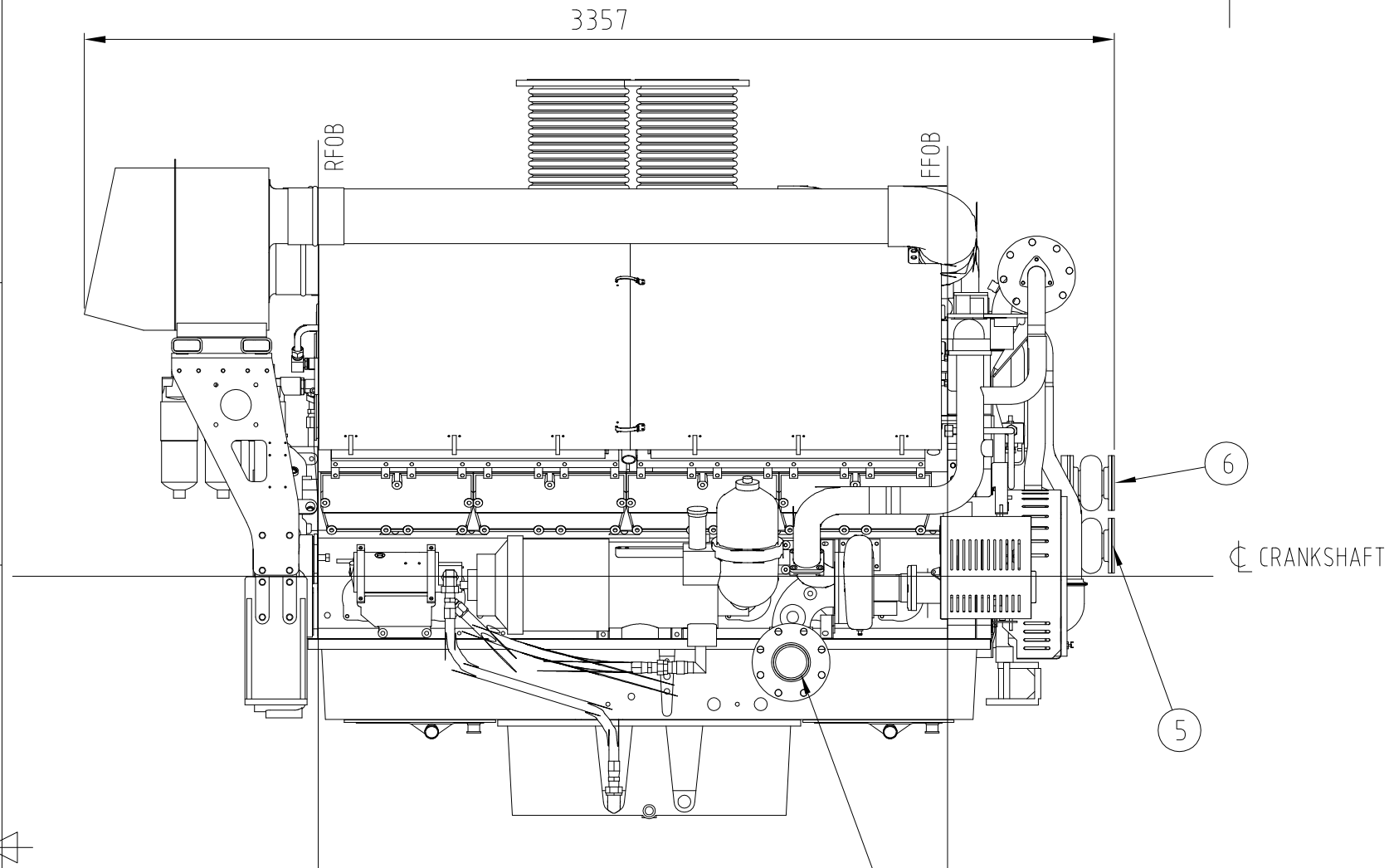

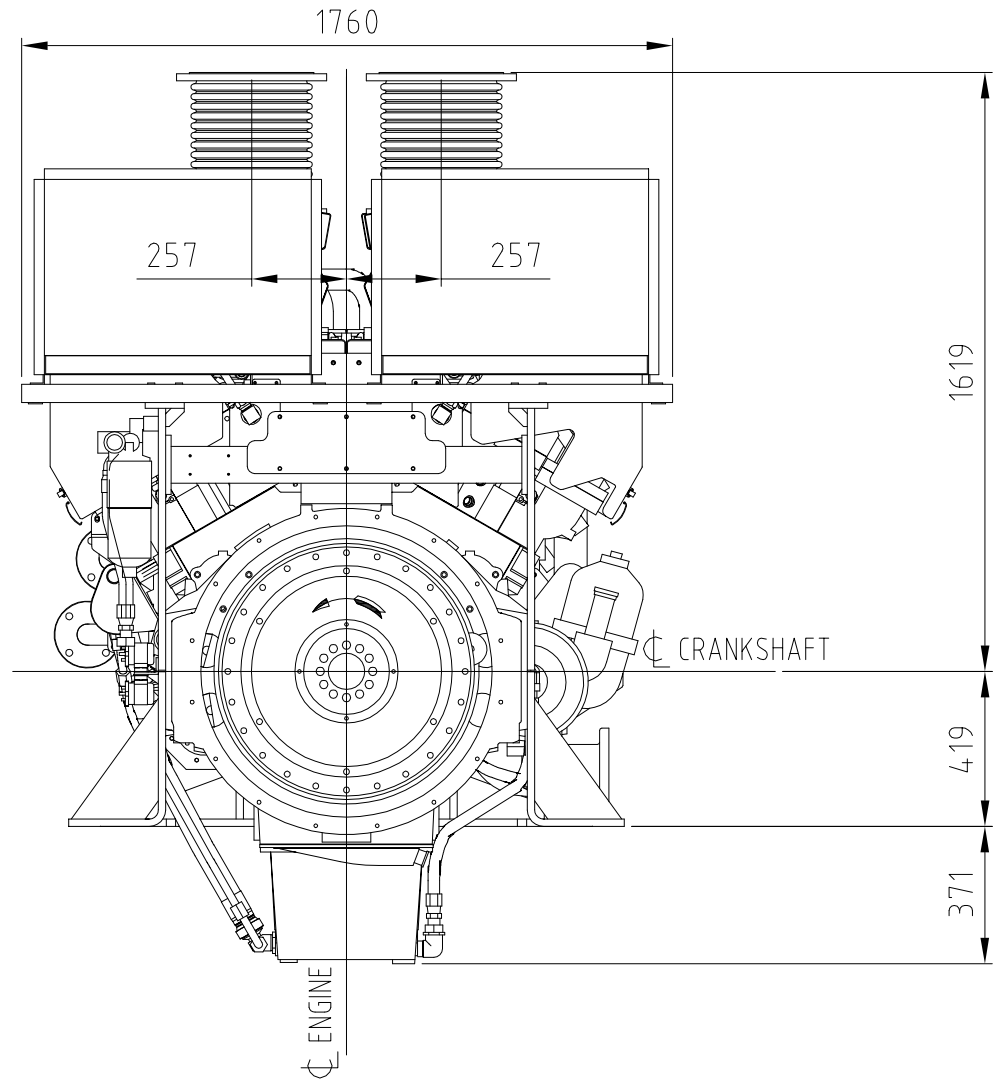

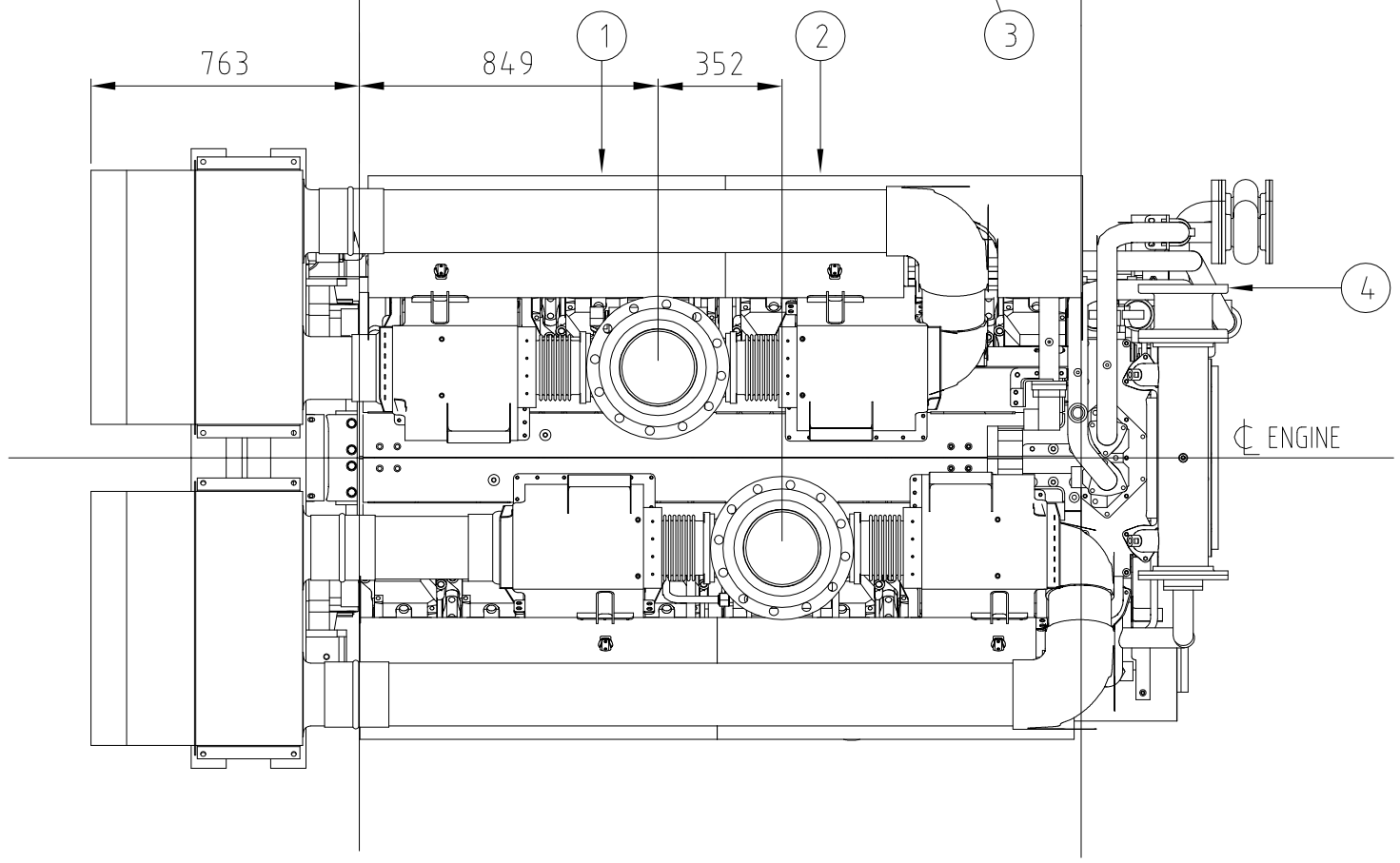

Engine weight: 8800 kg

Item	Name	Description
6	LTA Coolant outlet (to cooler)	
5	LTA Coolant return (from cooler)	
4	Coolant outlet (to cooler)	
3	Coolant return (from cooler)	
2	Fuel return	
1	Fuel inlet	

NOGVA

Surface			
Scale 1:20	Position –	Quantity –	
-	-		
-	-		
	Date	Name	
Drawn	19.05.2014	rune.lund	
Checked			
Standard			

Cummins QSK60 (KC)

Propulsion

T91-05658

Page -

Pg

State	Changes	Date	Name	Filename T91-05658