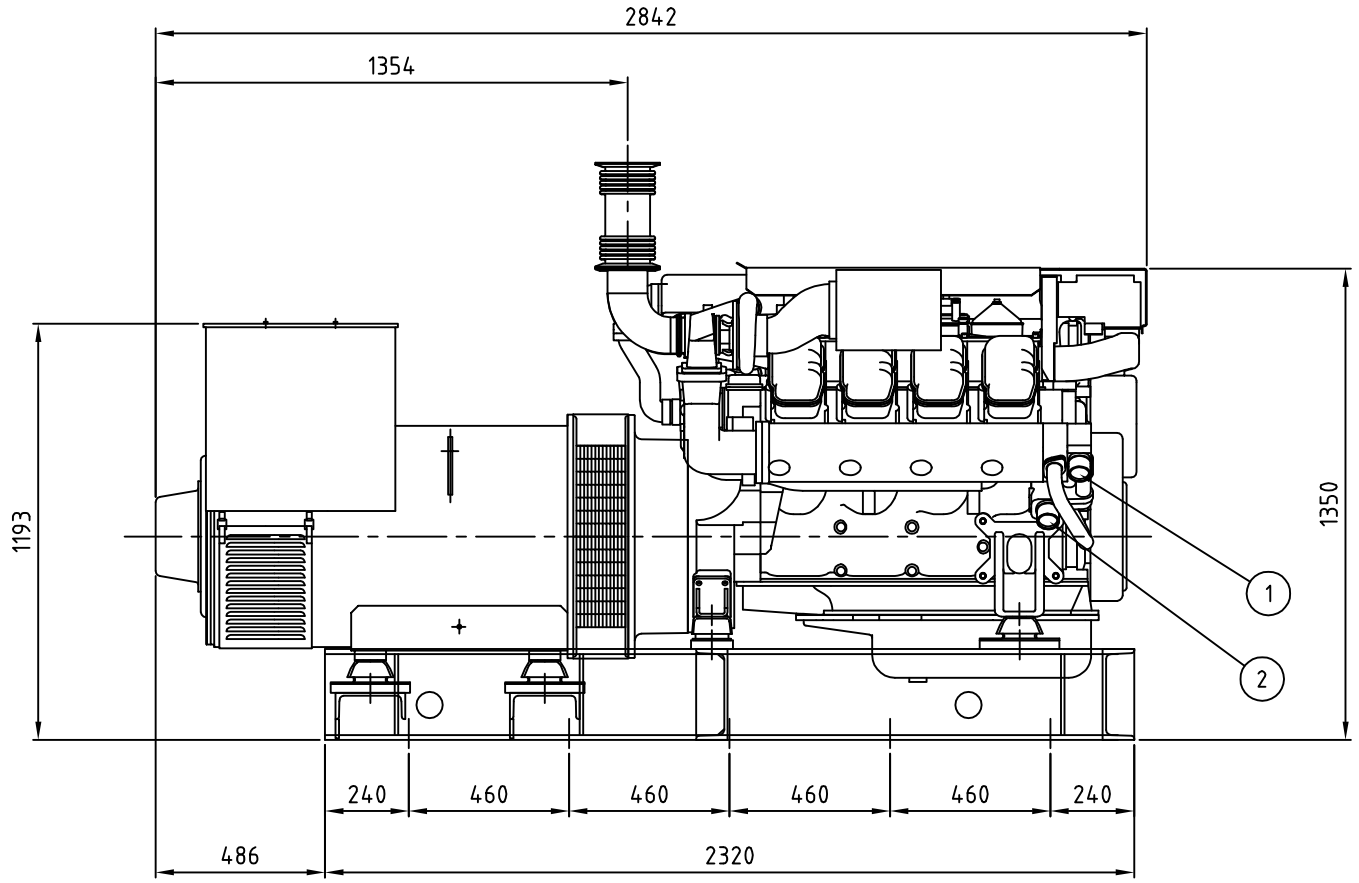

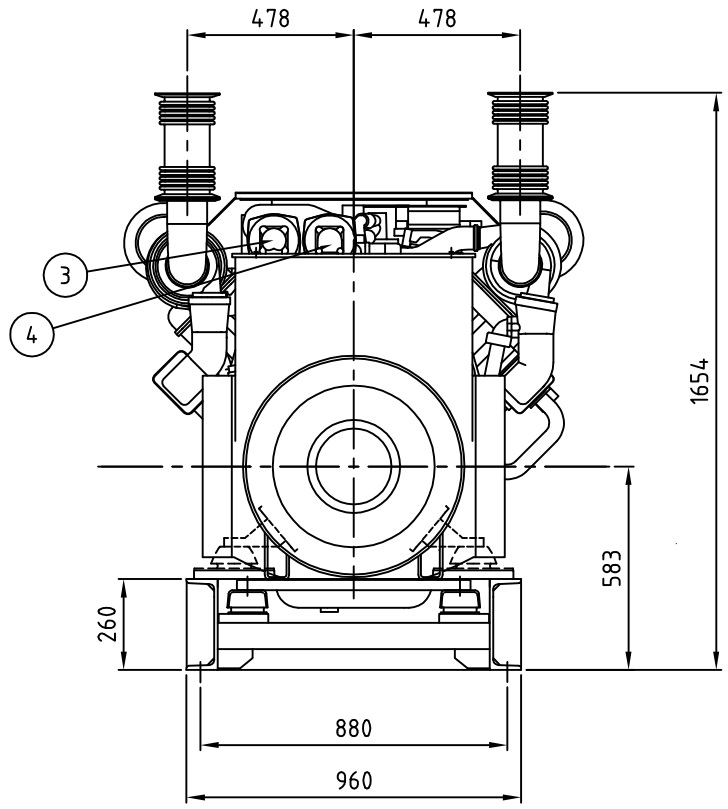

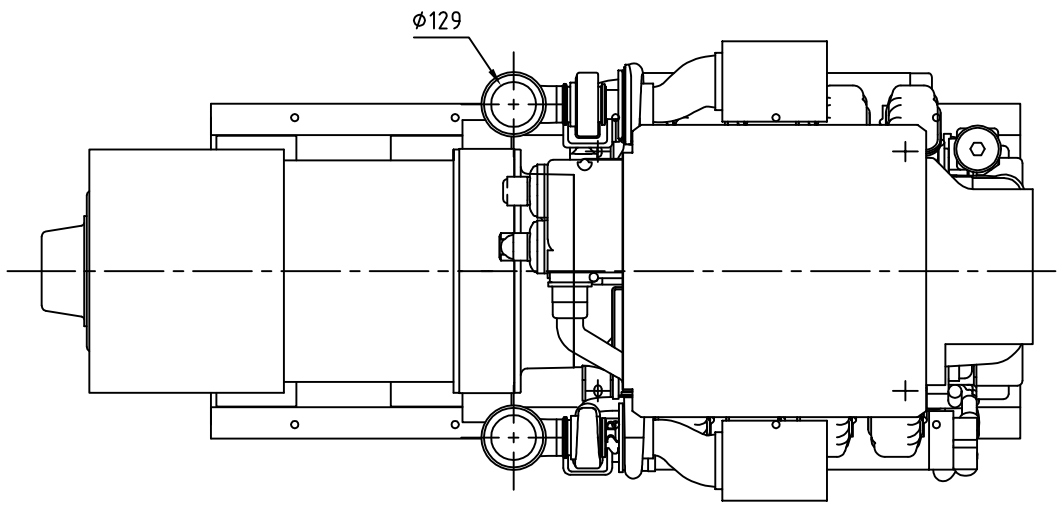

Item	Name	Description
4	Coolant outlet from CAC extarnal circuit	Ø51
3	Coolant inlet to CAC external circuit	Ø51
2	Water inlet	Ø63
1	Water outlet	Ø63

Approx weight:

Engine:	1670 Kg
Generator:	1730 Kg
Base frame:	330 Kg
Total:	3730 Kg

NOGVA

Surface			
Scale 1:15	Position –	Quantity –	
-		-	
-		-	
	Date	Name	
Drawn	29.11.2012	HIR	
Checked			
Standard			

Scania DI16 075M (KC)

Stamford HCM534F2

T91-05348

Page –

Pg

State	Changes	Date	Name	Filename T91-05348