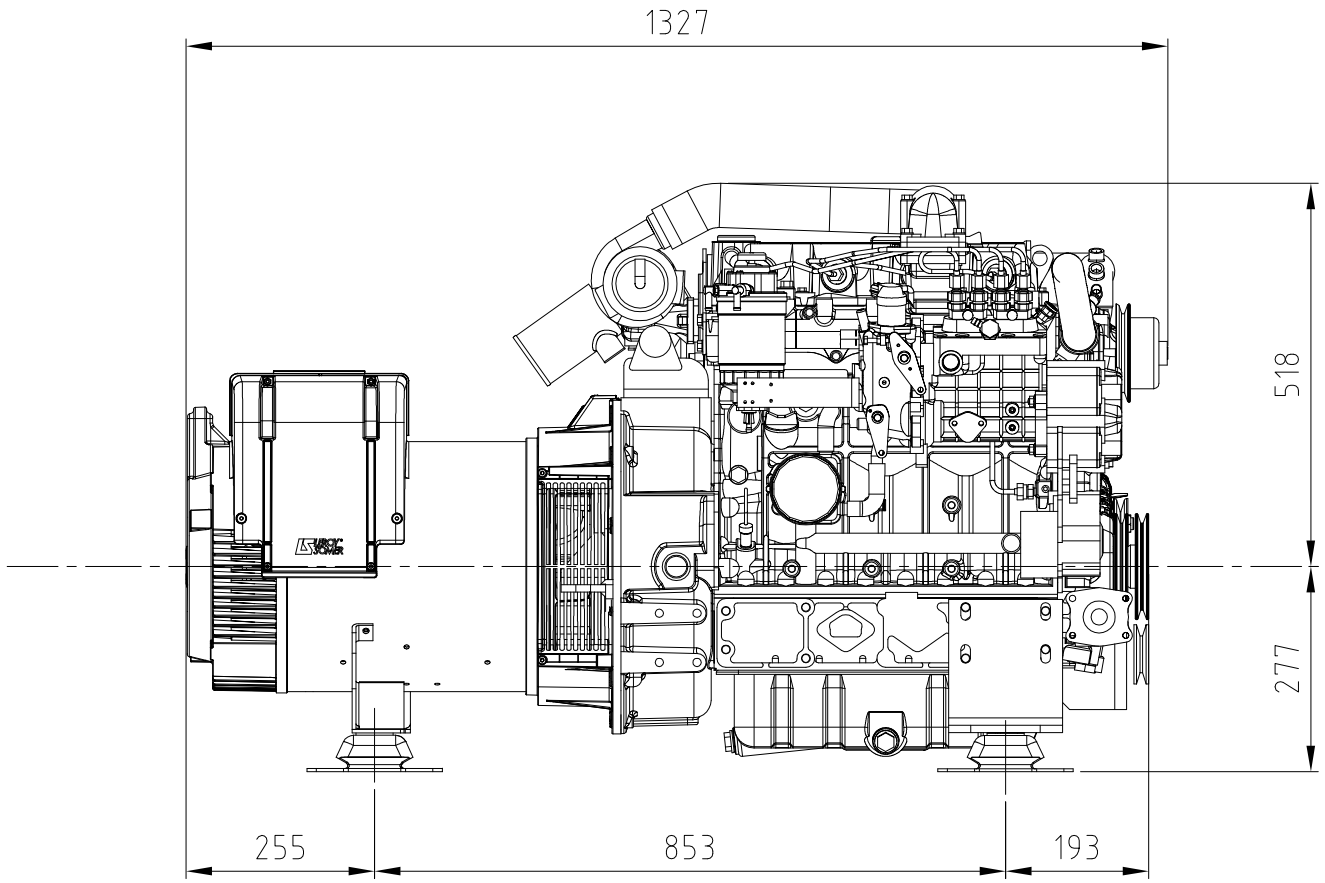

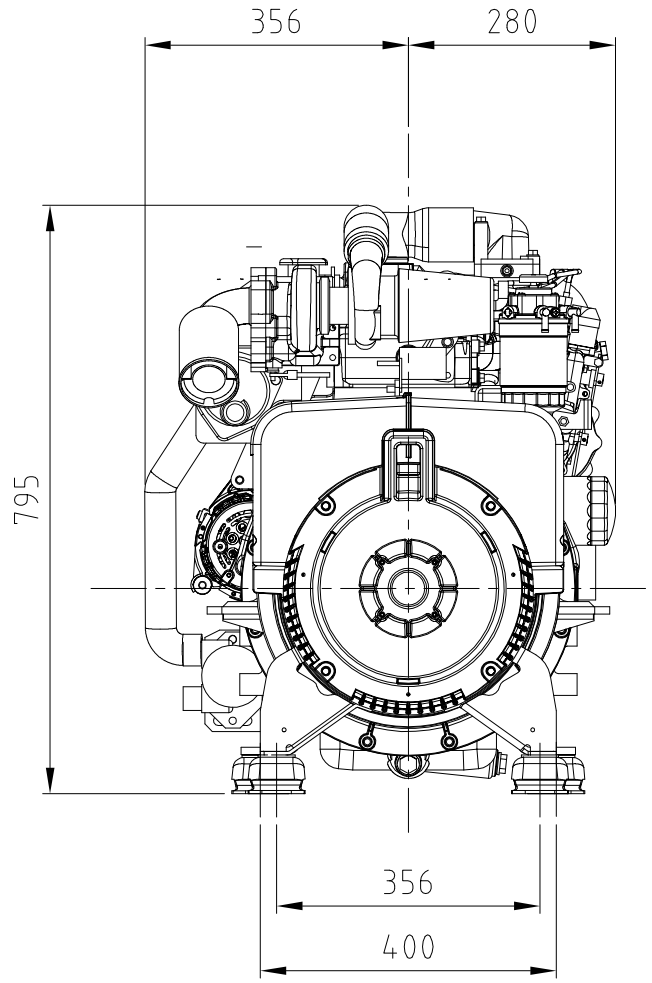

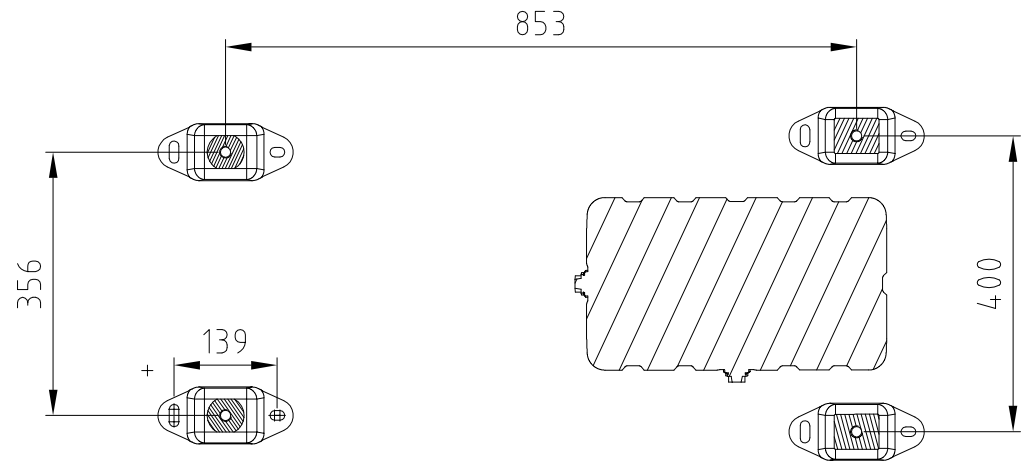

NOGVA						Surface	Scale 1:10	Position – Quantity –
							–	–
							–	–
					Date	Name		
				Drawn	01.02.2016	rune.lund	Nanni QLS47	
				Checked			GenSet	
				Standard				
							T91-06105	Page –
								Pg
State	Changes	Date	Name	Filename	T91-06105			