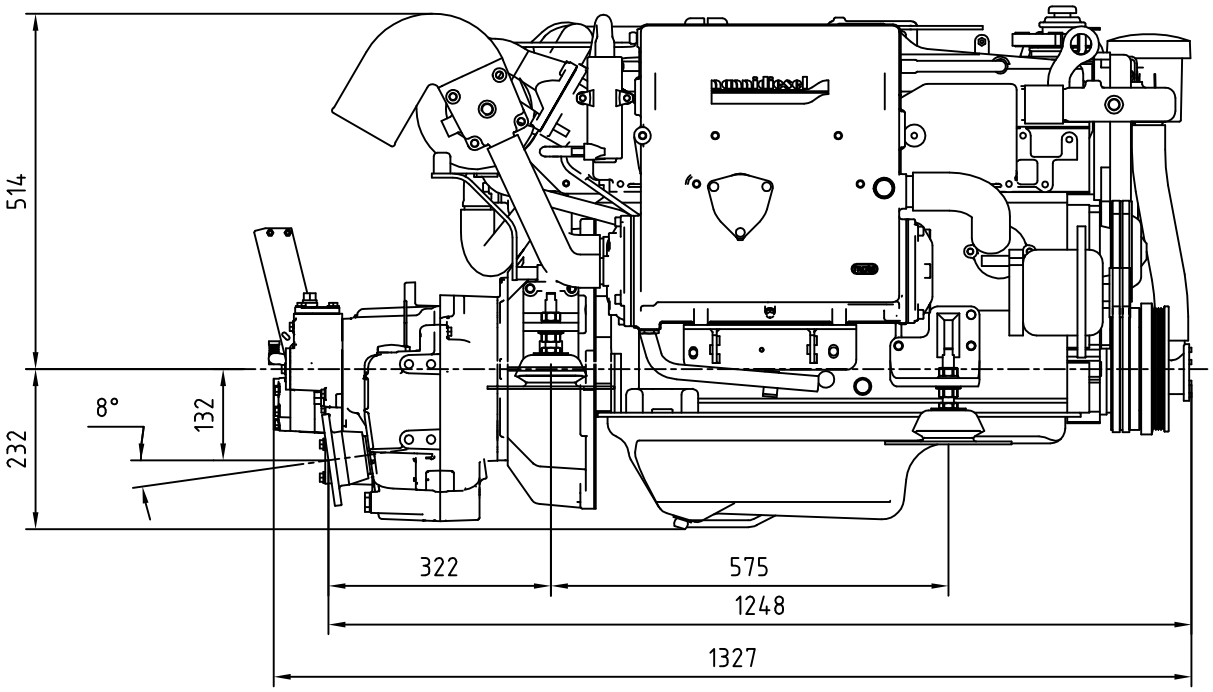

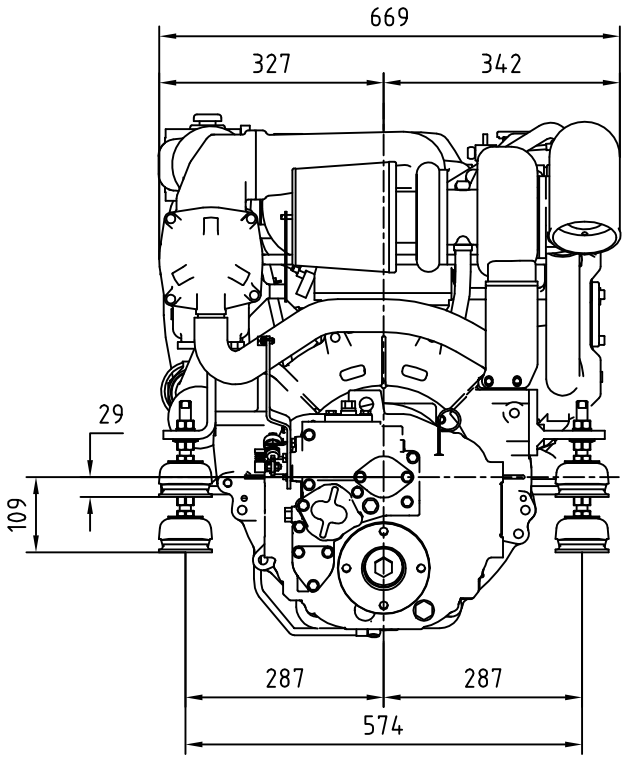

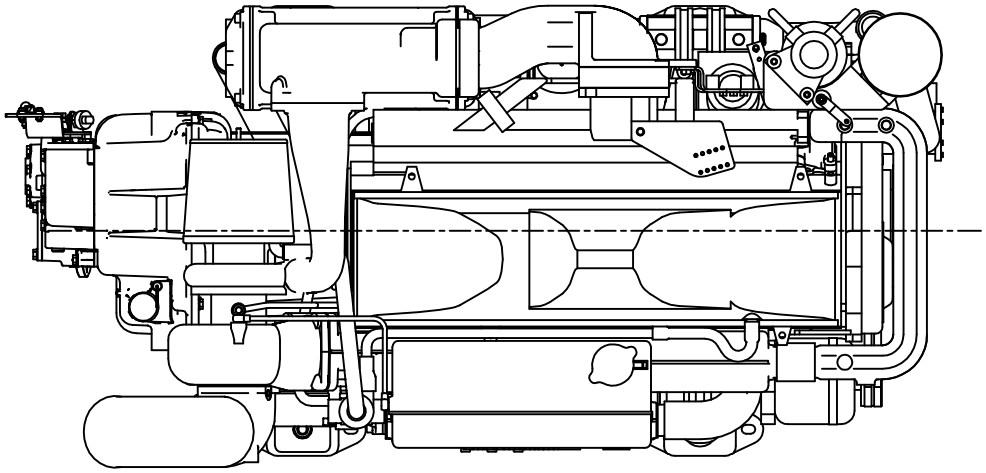

NOGVA						Surface	Scale 1:7.5	Position – Quantity –
					Date	Name	-	-
				Drawn	03.06.2009	HIR	Nanni 6.420TDI	
				Checked			TTM50A	
				Standard				
							3-4709	Page –
State	Changes	Date	Name	Filename	3-4709			Pg