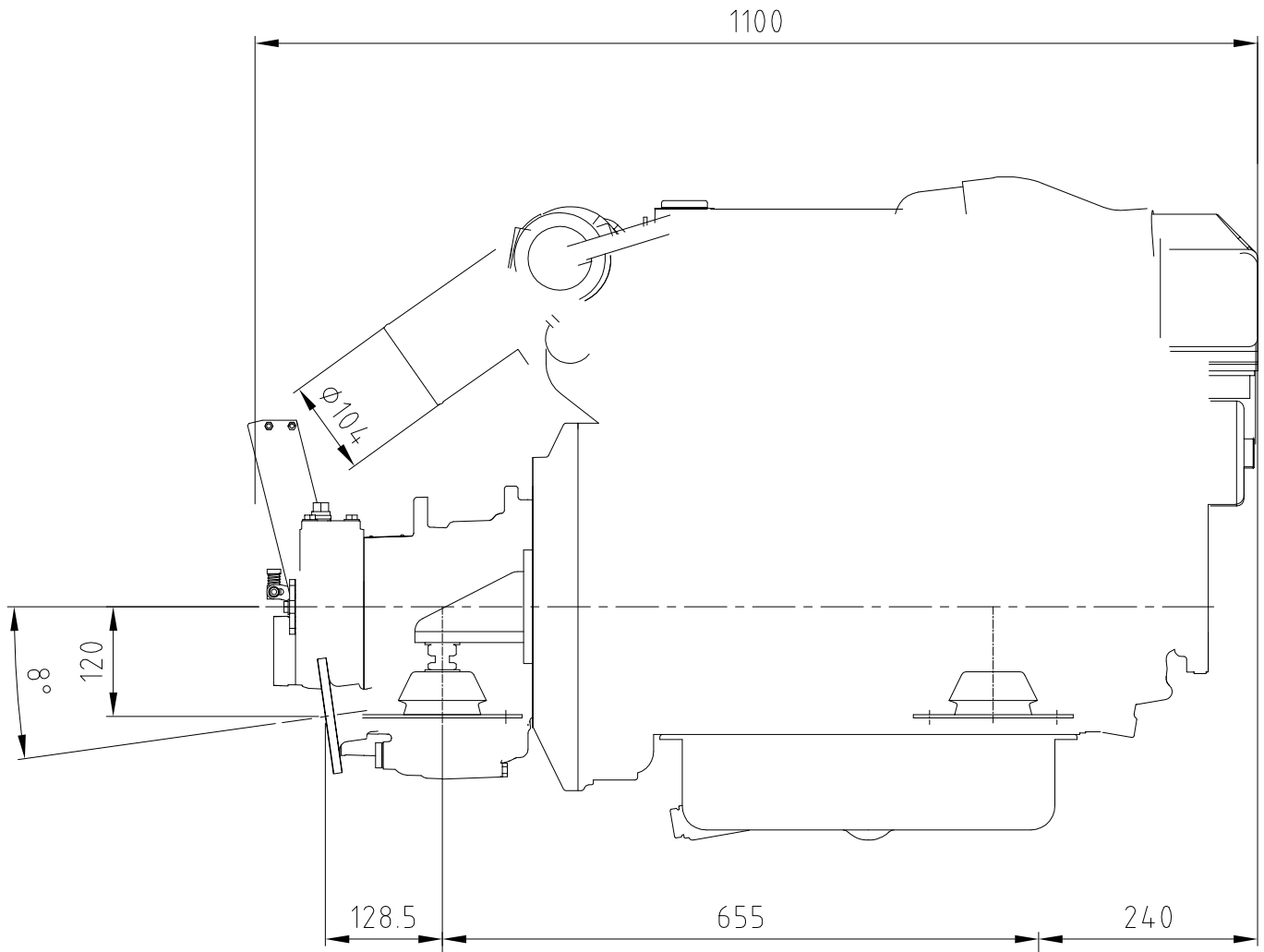

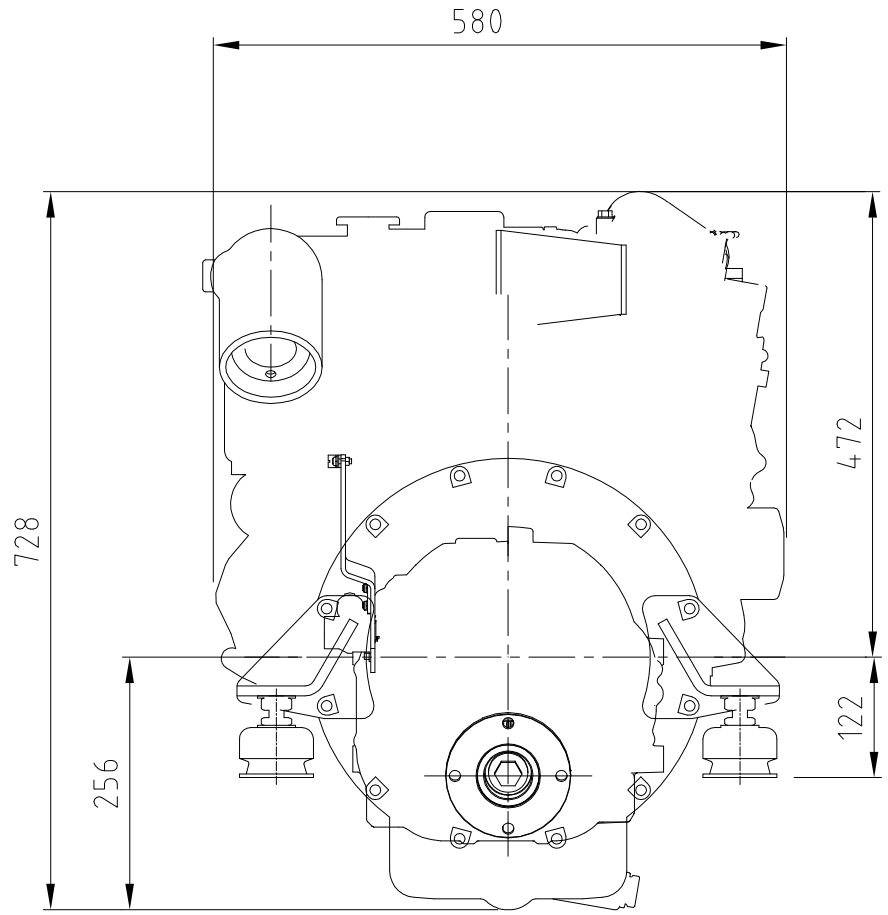

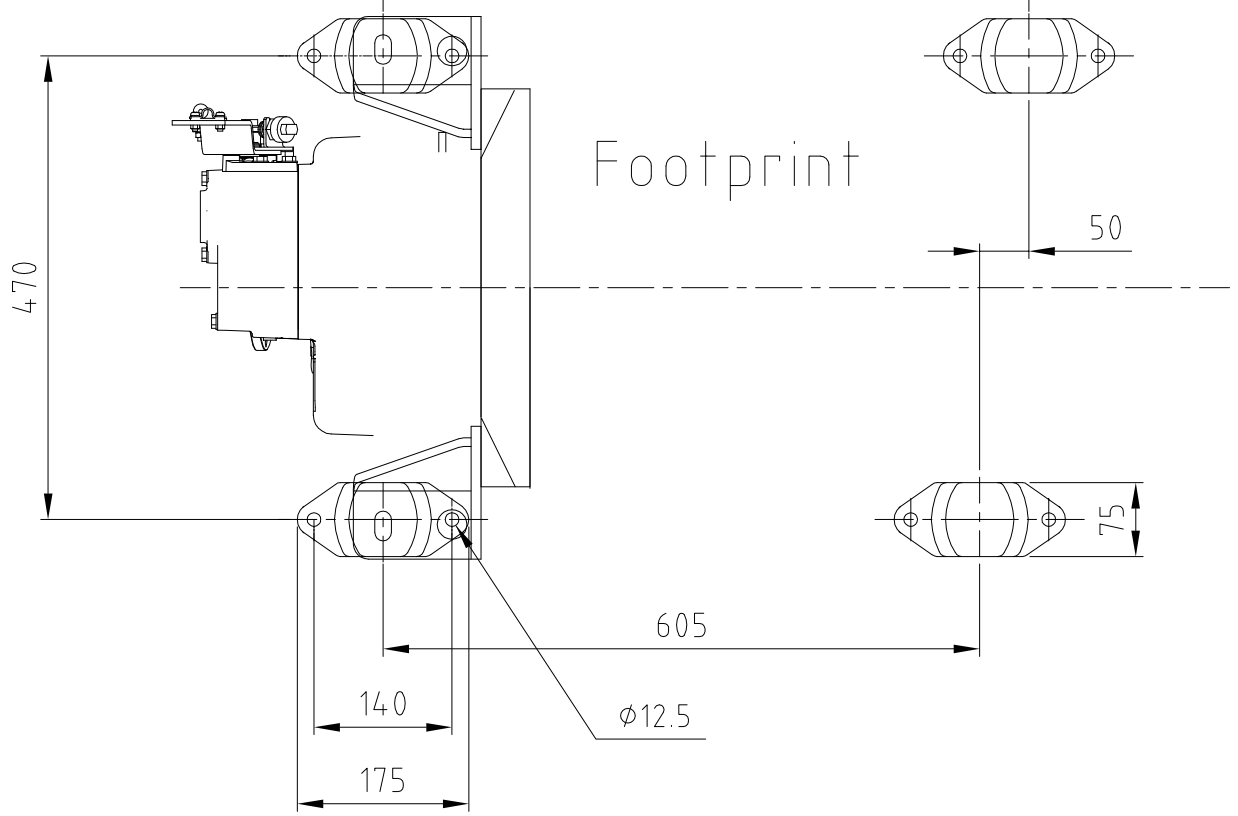

× Fremre labb 50mm lengre bak på styrbord

NOGVA					Surface	Scale 1:7.5	Position –	Quantity –
						–		–
					Date	Name	Nanni N4.115 / N4.140	
				Drawn	06.05.14	HIR	TTM40A	
				Checked				
				Standard				
							T91-05646	Page –
State	Changes	Date	Name	Filename	T91-05646			Pg