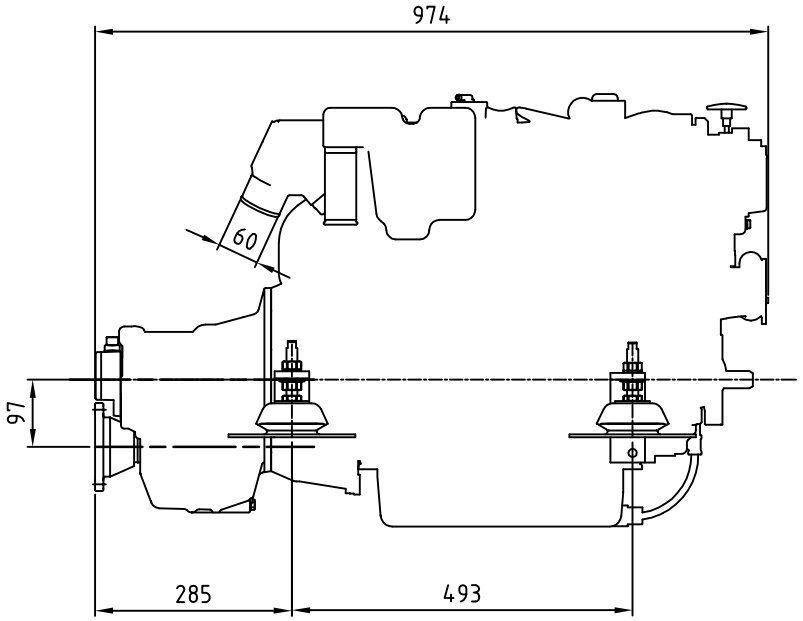

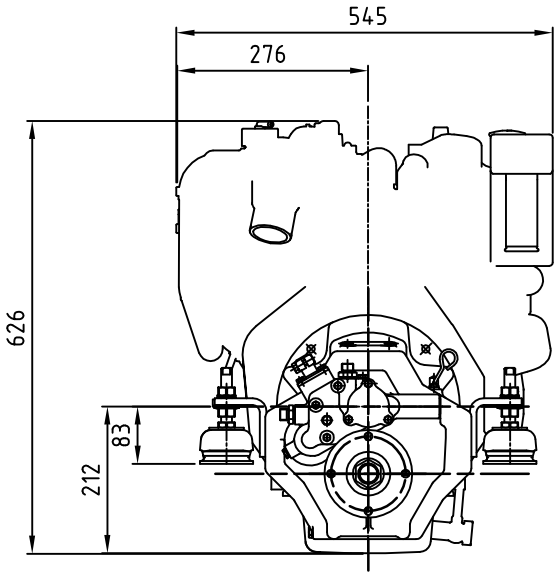

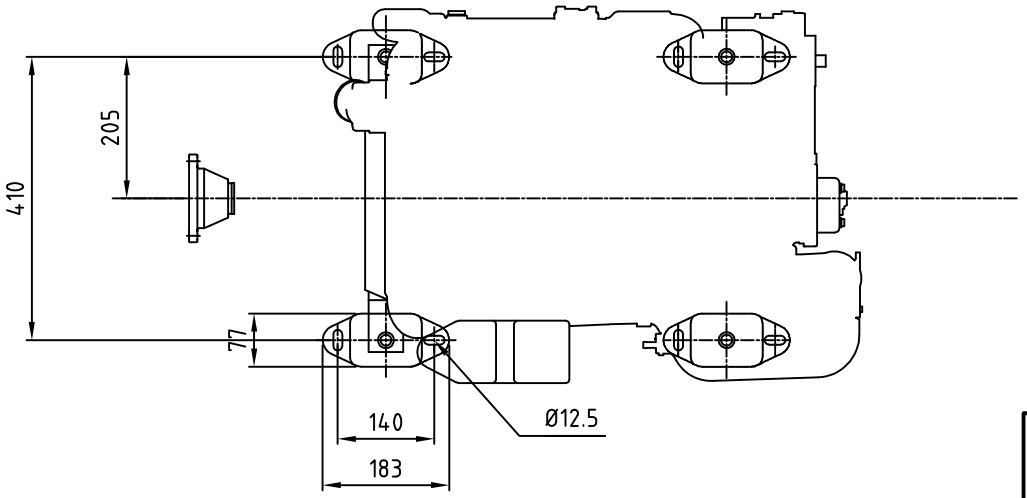

NOGVA					Surface	Scale 1:7.5	Position –	Quantity –
						-		-
						-		-
				Date	Name			
				Drawn	11.03.2009	HIR	Nanni N4.50	
				Checked			Technodrive TM 345	
				Standard				
							3-4658	Page -
State	Changes	Date	Name	Filename	3-4658.dwg			Pg