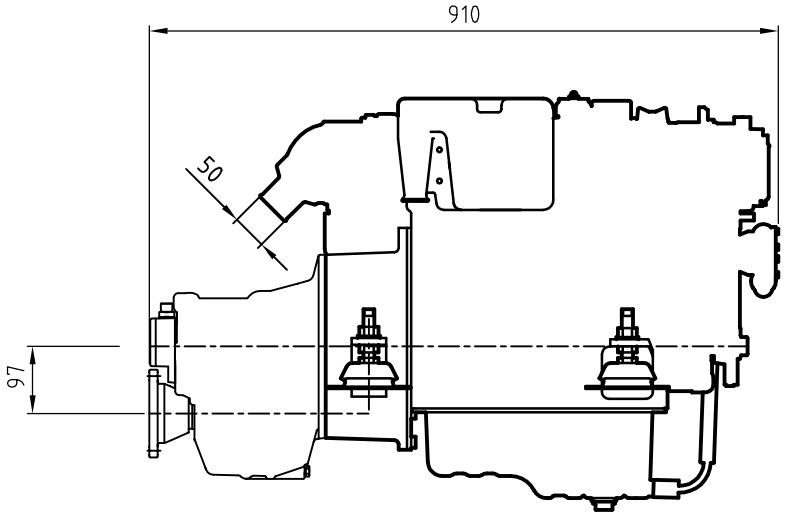

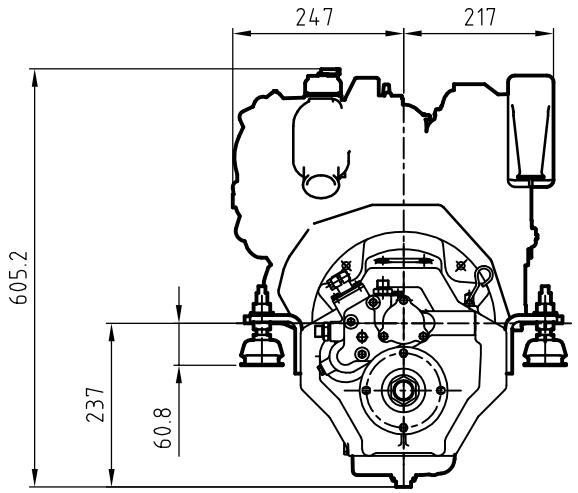

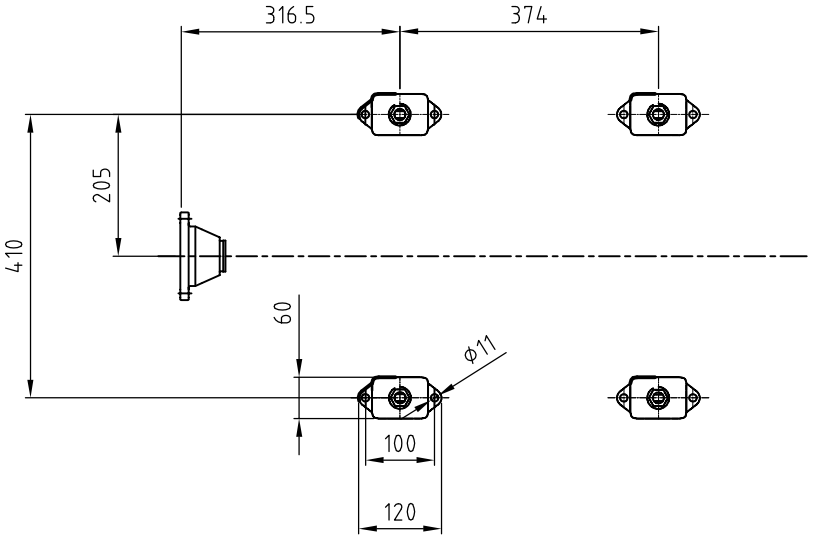

NOGVA						Surface	Scale 1:7.5	Position – Quantity –
							-	-
							-	-
					Date	Name	Nanni N4.38	
				Drawn	09.03.2009	HIR	Technodrive TM-345	
				Checked				
				Standard				
							3-4656	Page –
State	Changes	Date	Name	Filename	3-4656.dwg			Pg