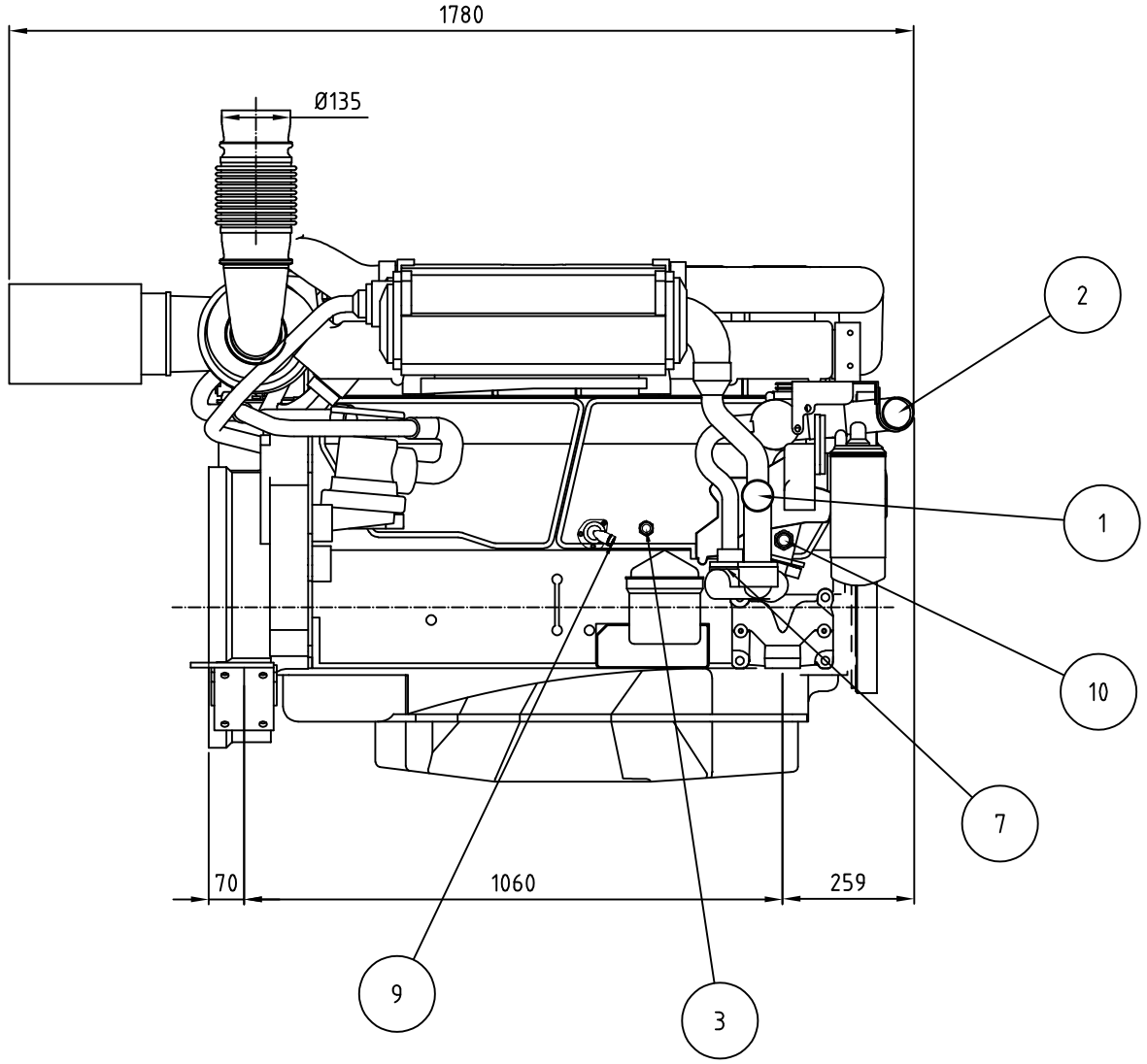

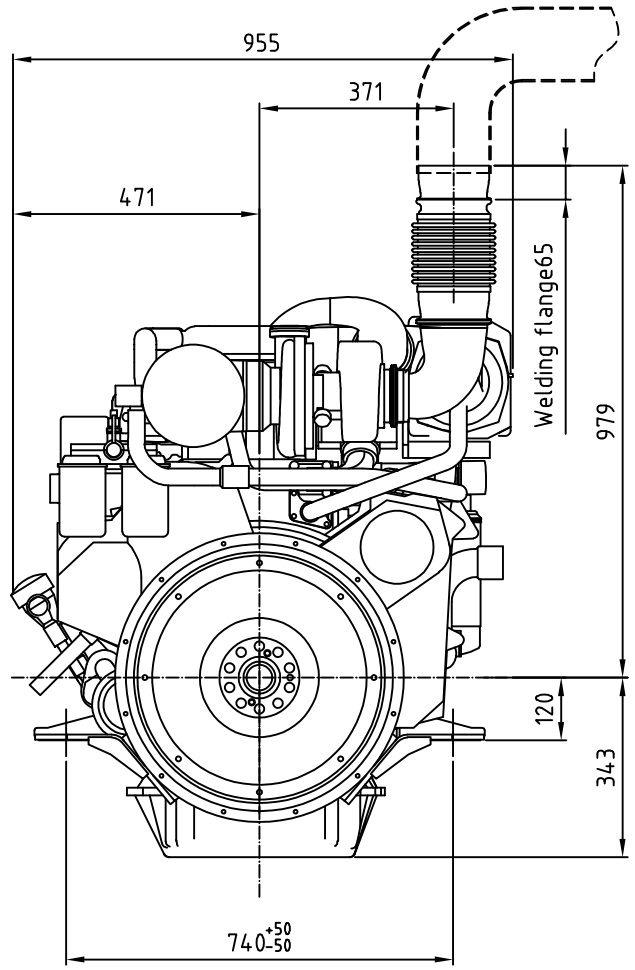

1 Cooling water inlet (Dia. 63)
2 Cooling water outlet (Dia. 63)
3 Coolant drain/filling (Fresh water)(E2)
4 Fuel inlet hose nipple (For hose Di 9)(E6)
5 Fuel return hose nipple(For hose Di 9)(E6)
6 Connection to cab heater (M18x1.5)(F5)
7 Connection from cab heater (M18x1.5)(E1)
8 Bleed pipe (For hose Di 8)(C7)
9 Block heater (Optional)
10 Static line (For hose Di 25)(E1)

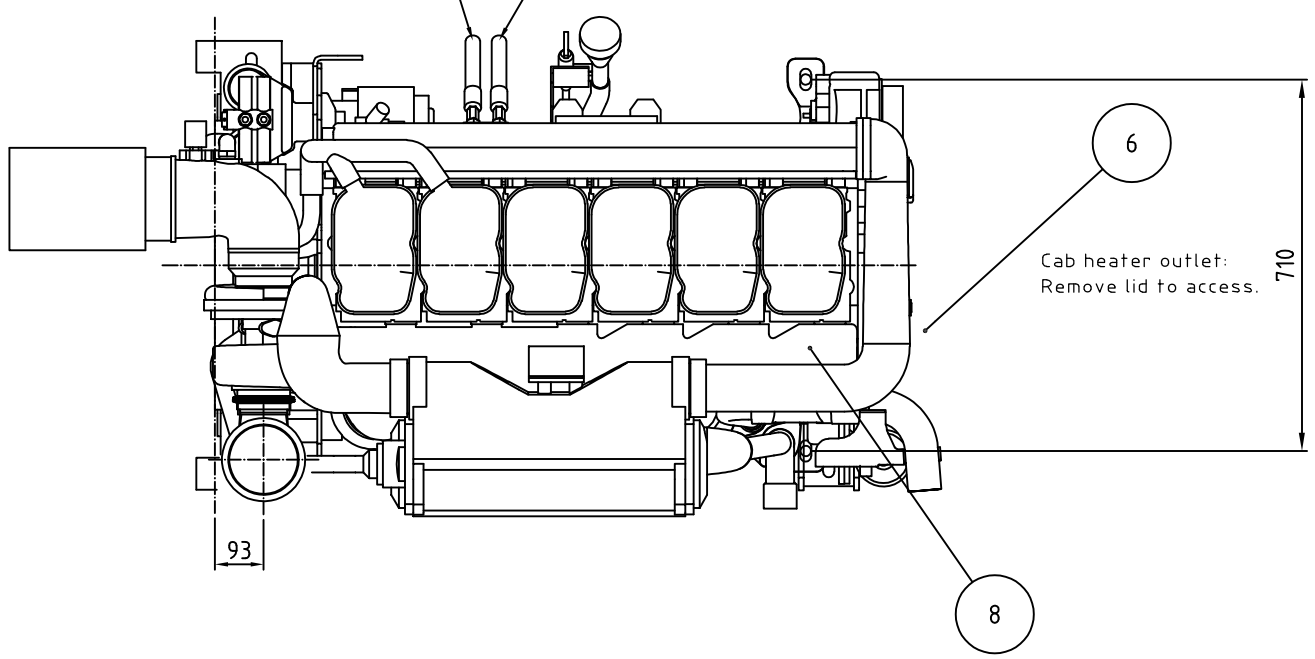

Vibration isolator

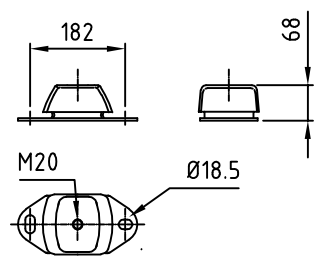

Engine weight (dry): 1140 kg
Oil capacity : 28-34 L

State	Changes	Date	Name
05	New exh.bend & comp.	10.01.18	HIR
04	Engine suspension	07.04.16	RNL
03	Switched inlet/outlet	10.09.15	HIR
02	Fuel connections.	01.12.14	RNL
01	Edit inlet/outlet dim.	19.05.14	HIR

NOGVA

	Date	Name
Drawn	27.04.12	HIR
Checked		
Standard		

Filename T91-05220

Surface

Scale 1:10 | Position | Quantity

Projection method

Scania DI13 (KC)

Propulsion

T91-05220 (Rev 05)

Page

Pg