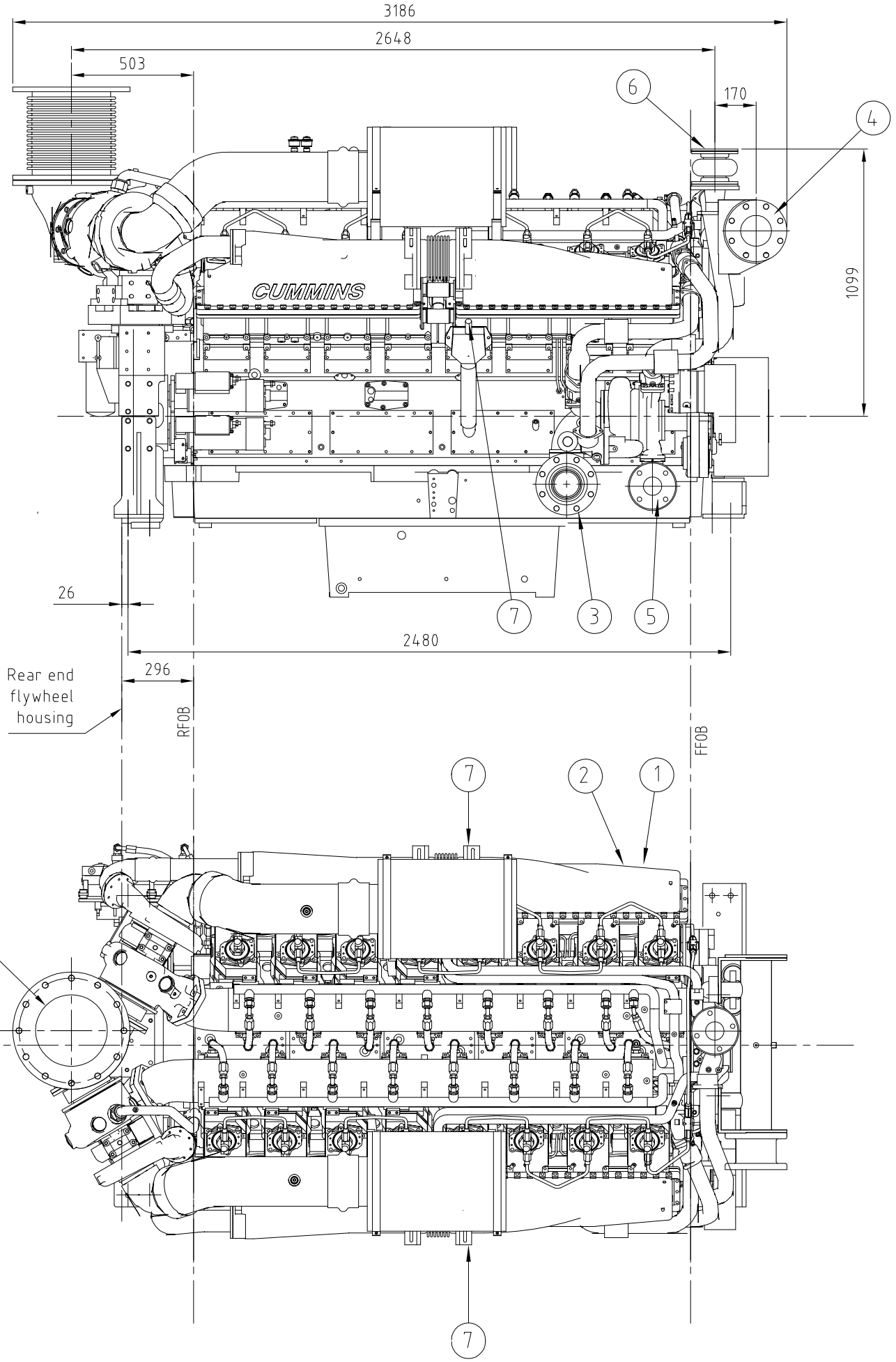

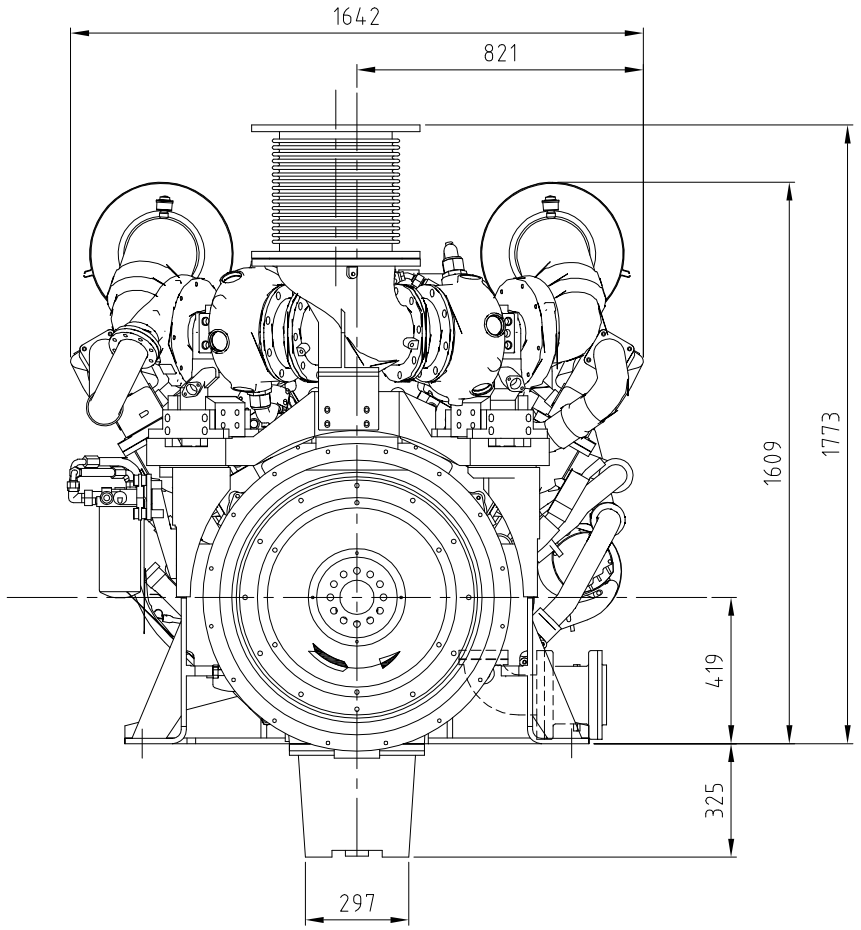

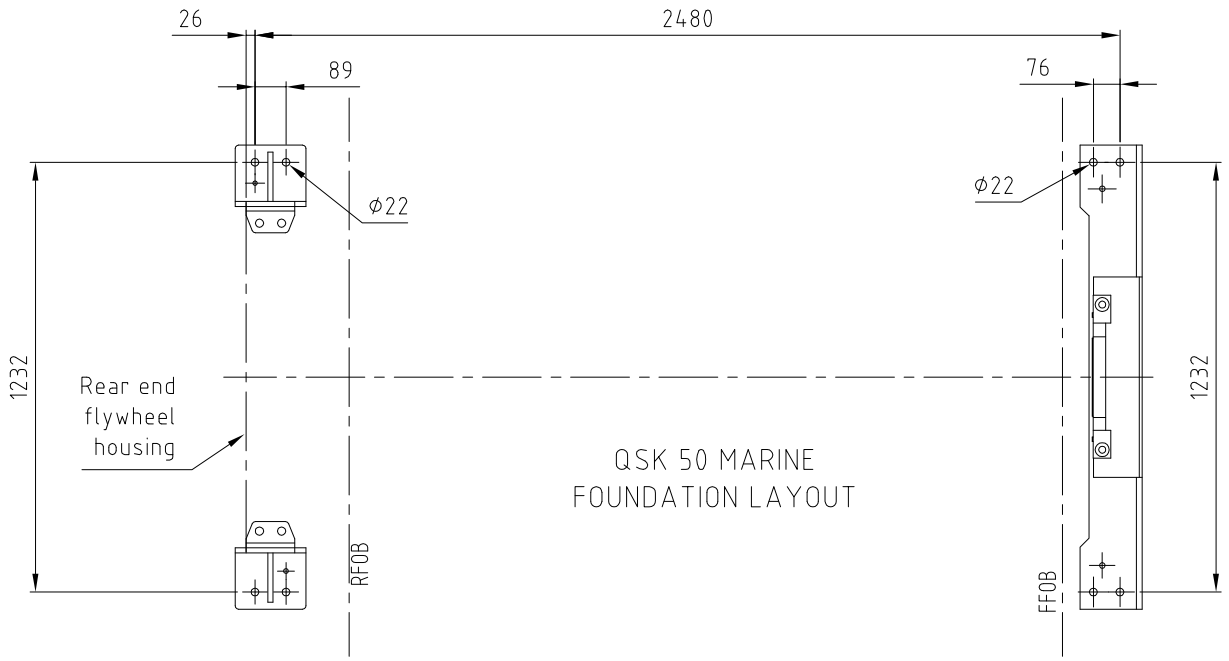

Item	Name
7	Crankcase vent Ø25.4
6	Charge air cooler outlet
5	Charge air cooler inlet
4	Coolant outlet
3	Coolant inlet
2	Fuel return
1	Fuel inlet

Engine weight: 6615 kg

First angel projection

NOGVA

State	Changes	Date	Name
01	Div endringer	11.09.13	HIR

	Date	Name
Drawn	09.01.2013	HIR
Checked		
Standard		

Filename T91-05360

Surface

Scale 1:15 | Position – | Quantity –

Cummins QSK50-M (KC)

Propulsion

T91-05360

Page -

Pg