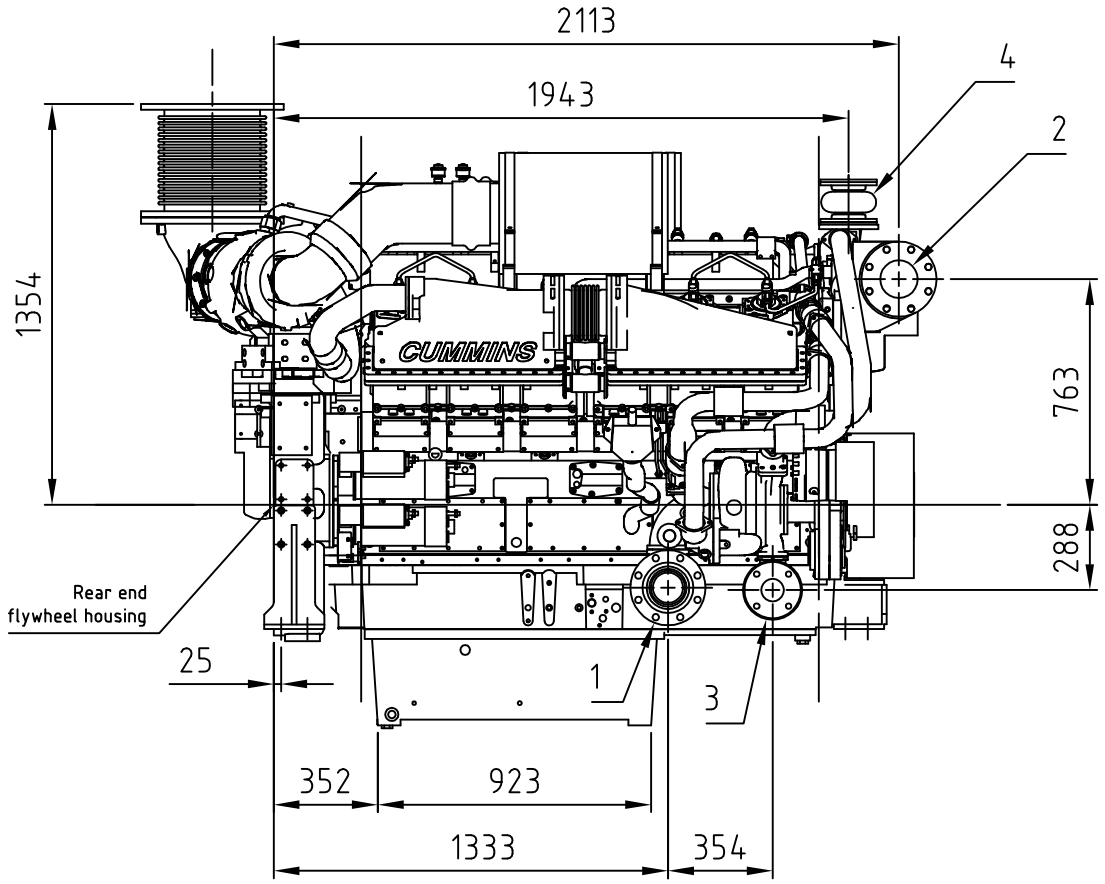

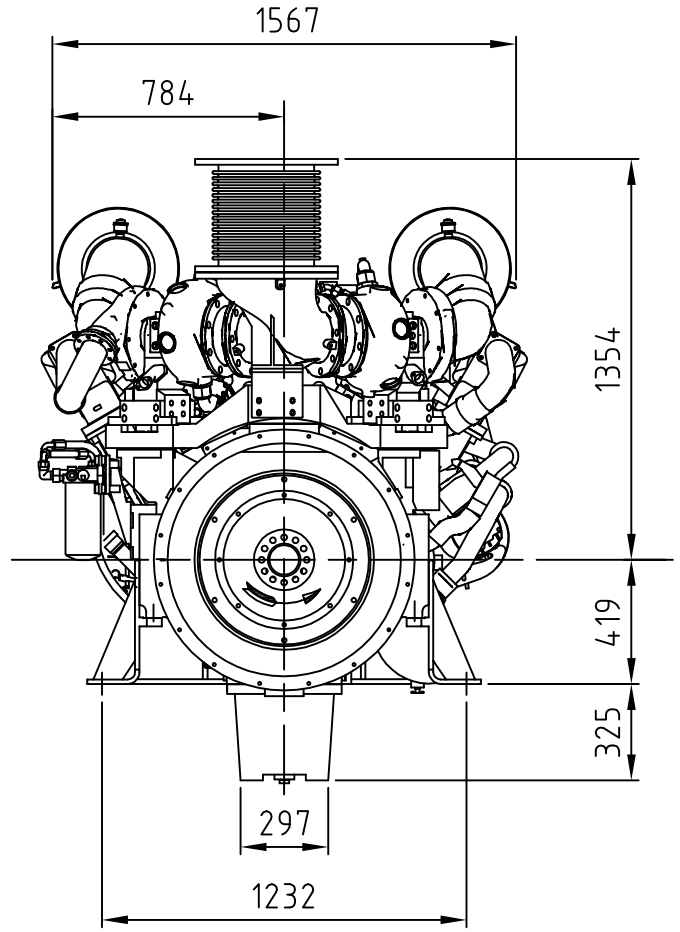

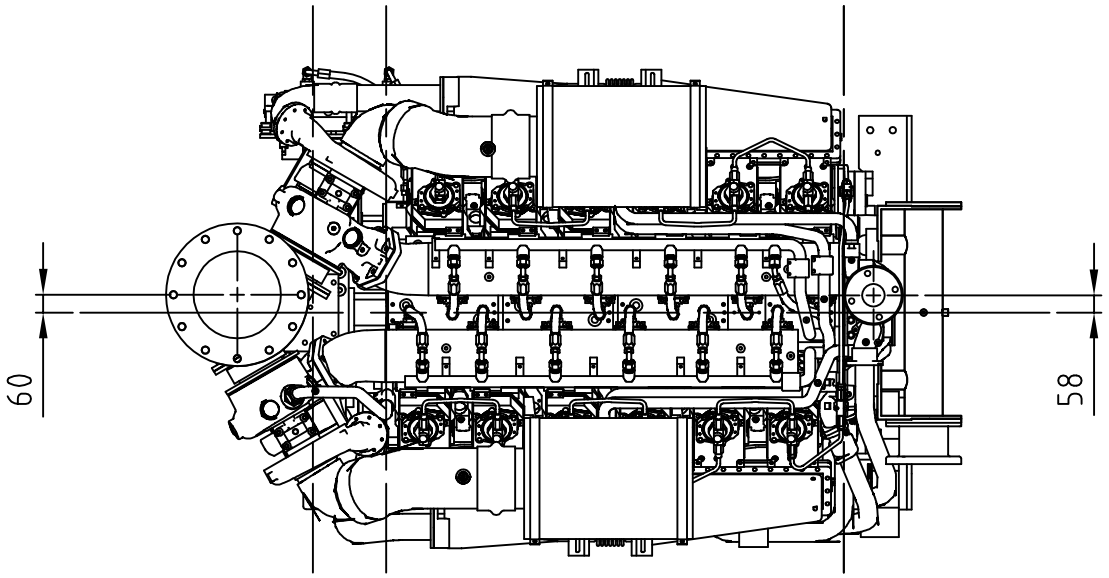

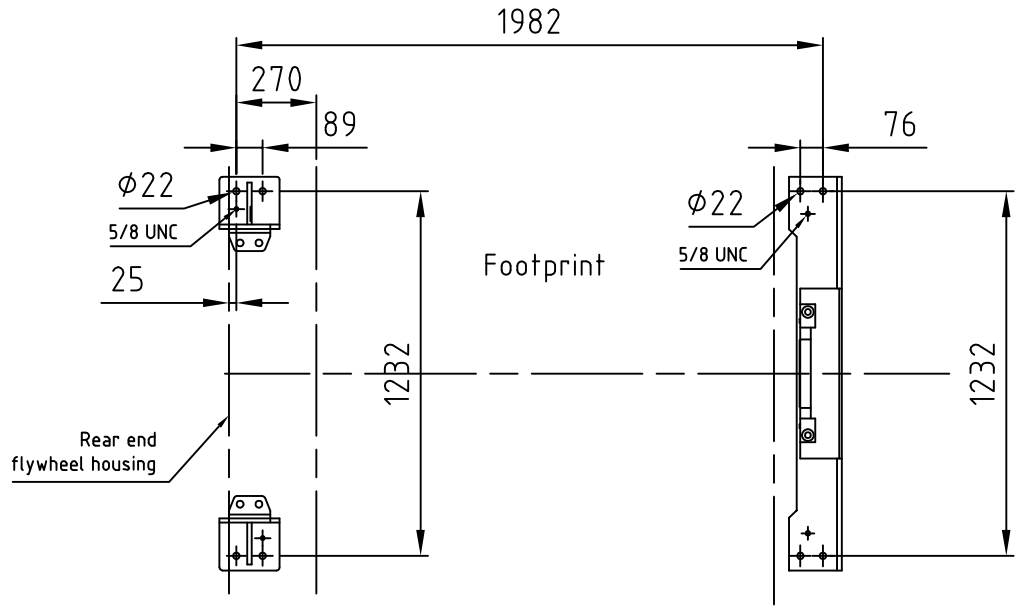

Item	Name
4	LTA coolant outlet
3	LTA coolant inlet
2	Main coolant outlet
1	Main coolant inlet

State	Changes	Date	Name
02	Changed to SAE00 FW.house	17.04.14	HIR
01	Updated dimensions	13.01.14	HIR

NOGVA

	Date	Name
Drawn	05.12.2013	lund
Checked		
Standard		

Surface

Scale 1:25 | Position – | Quantity –

Cummins QSK38 (KC)

Propulsion

T91-05557

Page –

Pg

Filename T91-05557