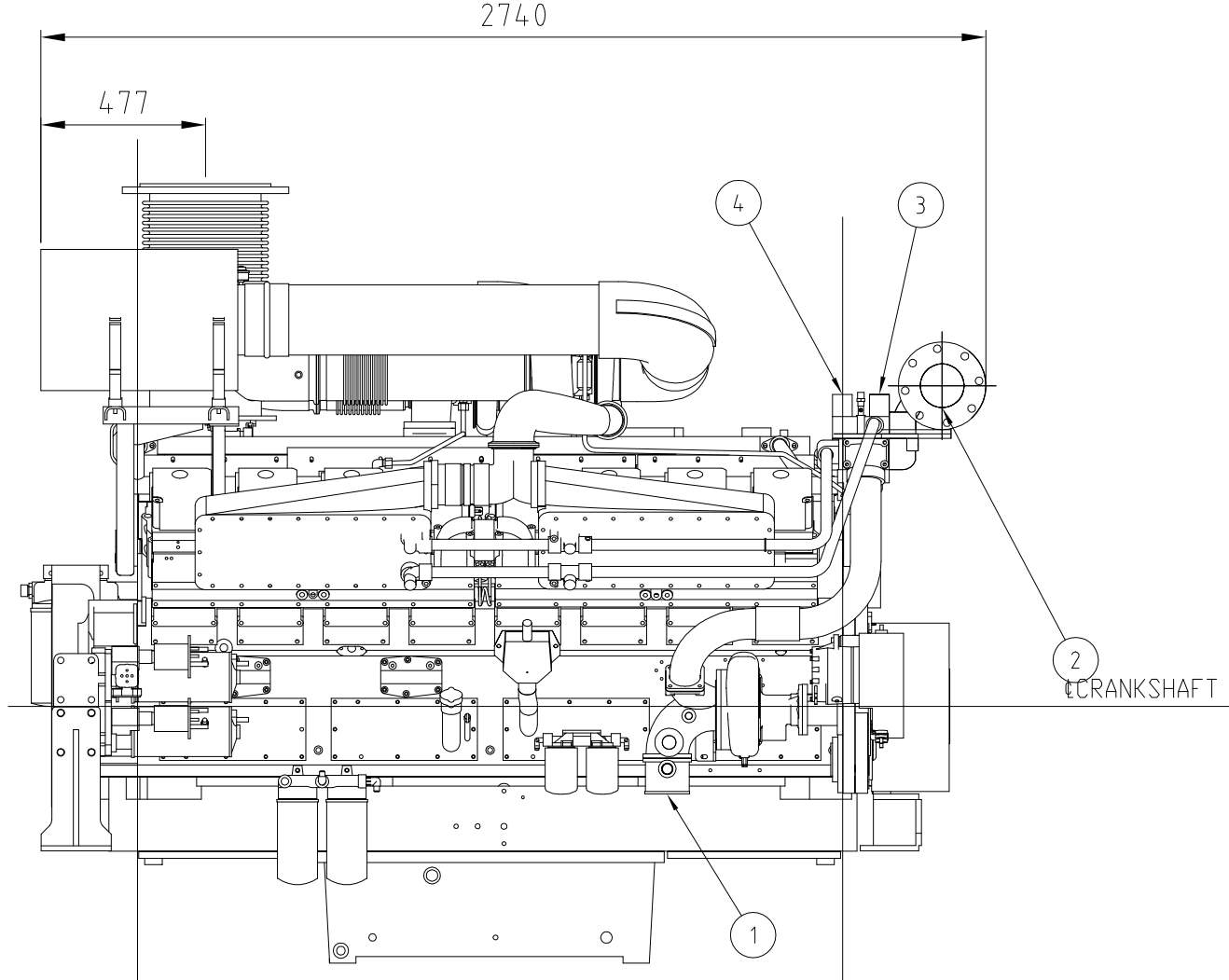

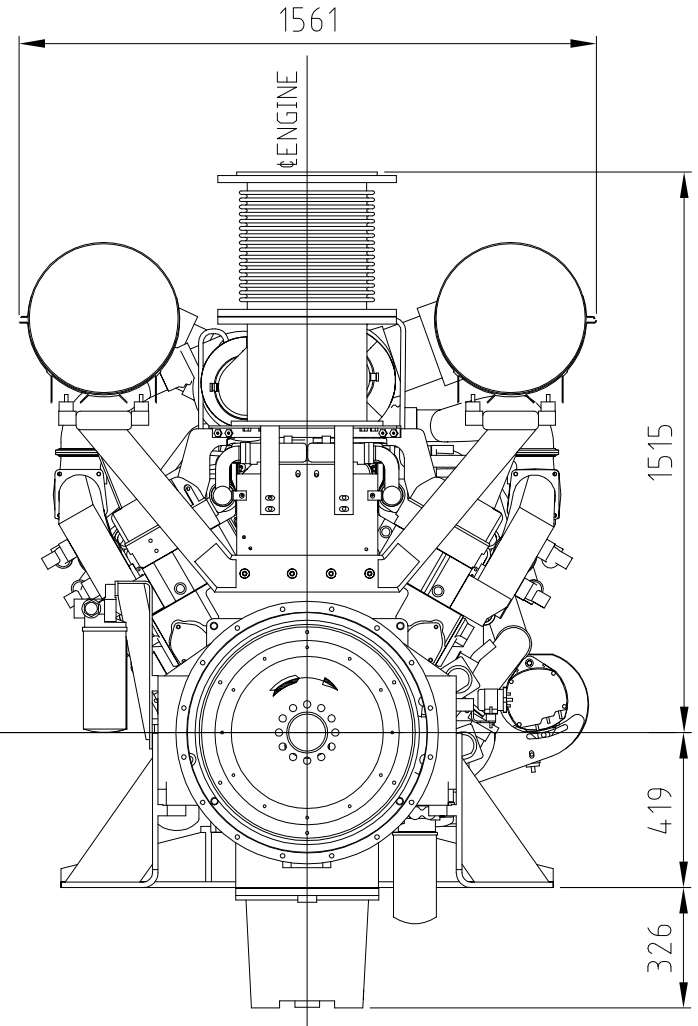

BACK VIEW

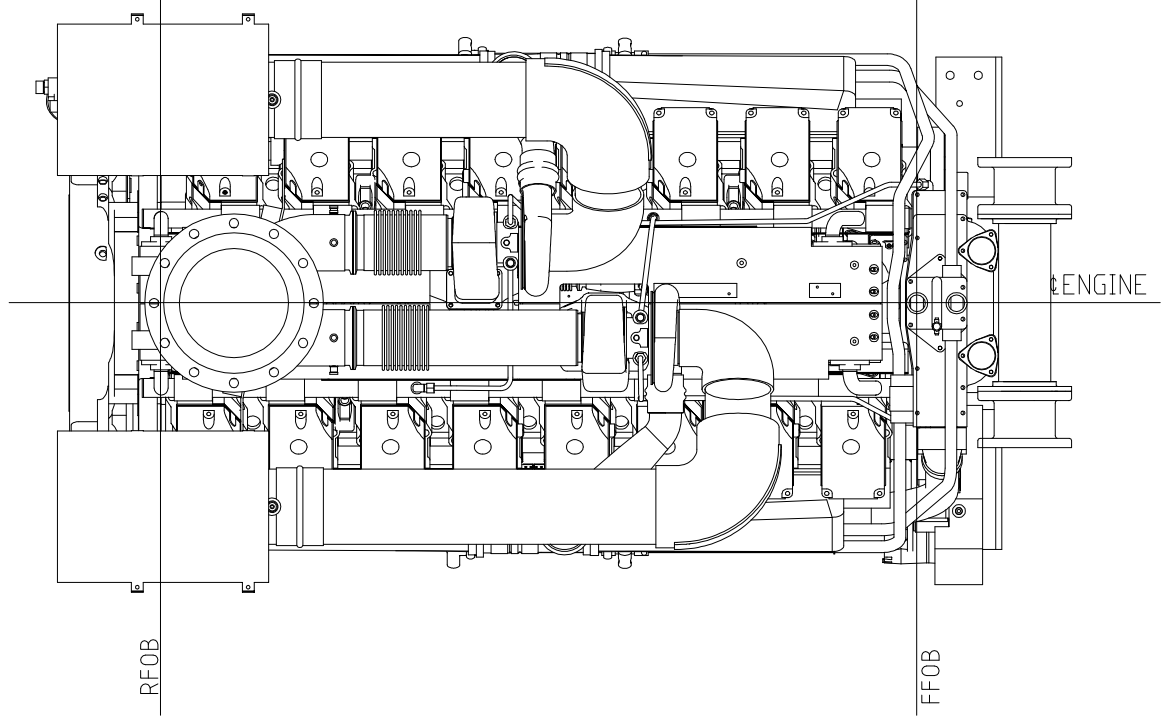

Item	Name
4	LTA coolant outlet
3	LTA coolant inlet
2	Main coolant outlet
1	Main coolant inlet

NOGVA

Surface			
Scale 1:20	Position –	Quantity –	
–		–	
–		–	

	Date	Name
Drawn	19.05.2014	rune.lund
Checked		
Standard		

Cummins KTA50 (KC)

Propulsion

T91-05659

Page –

Pg

State	Changes	Date	Name	Filename T91-05659